Document hosted by www.oldwillknottscales.com

Defender® 5000

Standard Low Profile Bench Scales

Multifunctional Bench Scale for Standard Industrial Applications

The OHAUS next generation Defender 5000 Series multifunctional bench scale is ideal for a multitude of applications, including production, packaging, inventory and shipping. Built durably and equipped with advanced features such as maximum configurability print output, GMP/GLP data output, library/ user management, and multiple connectivity options - the Defender 5000 is designed to simplify demanding industrial and commercial applications.

Standard Features:

- **Indicator Guides The User with On-Screen Prompts**
  See results clearly on the large backlit display. The alpha-numeric keypad and function keys allow for a simplified user experience. On-screen prompts and soft keys will guide you through the operation.
- **Durably Constructed To Withstand Harsh Industrial Environments**
  Durably constructed with a stainless steel platform and indicator front mount, sand gray powder-coated steel frame and aluminum load cell. Supports up to 6,250e NTEP and Measurement Canada certified resolution for legal-for-trade applications.
- **Multiple Application Modes and High Storage Capacity for Greater Flexibility**
  Features common industrial modes and supports a 50,000 item library and 1,000 user profiles which can be downloaded/uploaded for easy set-up with the included Micro SD Card. Also equipped with GLP/GMP output capability with time/date for result traceability. Alibi memory available.
- **Multiple Connectivity Options for Convenient Data Transfer and Storage**
  Results can be stored in the Micro SD card. Data output via built-in RS232 or optional interfaces including 2nd RS232/RS485/USB device, Ethernet, Bluetooth/WiFi, Analog Output and Discrete I/O with relays.

Ingeniously Practical

Document hosted by www.oldwillknottscales.com

Defender® 5000 Standard Low Profile Bench Scales

Simplified Use

Results can be read easily on the Defender 5000's large transflective dot matrix display, even in bright sunlight. The SmarText 3.0 interface will guide you through all of the Defender 5000's unique and advanced features. With five soft keys, SmartText 3.0 makes an advanced scale very simple to use, and reduces training time for operators.

Durable Construction

The Defender 5000 can be used for both general and legal-for-trade applications. For standard industrial applications, the Defender 5000 bench scales offer durable performance at a practical price.

Simple Operation

Featuring most common applications including Parts Counting with APW optimization, Checkweighing or Checkcounting, Percent Weighing, and Dynamic Weighing or Display Hold, the Defender 5000 meets the weighing and measurement needs of practically every industrial application or manufacturing process. Many application modes eliminate the need for long and complicated manual calculations. GMP/GLP with time/date allows for traceability of results.

Equipped with the included Micro SD card, the Defender 5000 can support storage of up to 50,000 items and 1,000 user profiles. Weighing results can also be stored in Alibi or regular format, addressing all your data storage needs.

Multiple Connectivity Options

Weighing results can be easily exported through the standard RS232 port. Additional connectivity options include a second RS232, RS485 or USB device; Ethernet; and WiFi/Bluetooth interfaces.

Using the Analog Option (either 4-20mA or 0-10V) or the two In/four Out Discrete I/O, the new Defender 5000 indicator can also be used for systems including PLCs.

Indicator Specifications

	TD52P	TD52XW
Construction	ABS plastic	304 stainless steel with sand blasting surface treatment
Weighing Units	lb, oz, lb:oz, kg, g, metric tonnes, short ton, custom unit	
Application Modes	Weighing, Percent Weighing, Piece Counting with Optimized APW, Checkweighing/Checkcounting, Dynamic Weighing/Display Hold	
Display	Dot matrix LCD with white LED backlight, 256 x 80 pixels	
Keyboard	6 function, 5 quick, 12 alpha numeric membrane switches	
Auto-zero Tracking	Off, 0.5 d, 1 d or 3 d	
Zeroing Range	2% or 100% of capacity	
Interface	Standard RS232, Optional Ethernet, WiFi/Bluetooth, RS232/RS485/USB, Analog Output, 2 In/4 Out Discrete I/O	
Power	100-240 VAC / 50/60 Hz Universal Power Supply, Rechargeable Lithium battery (optional)	
Battery Life	20 hours of continuous use	
Calibration	Zero, Span or 3 point-Linear	

Document hosted by www.oldwillknottscales.com

Defender® 5000 Standard Low Profile Bench Scales

Front Mount Bench Scale Specifications

Model	D52P12RQR5 D52XW12RQR5	D52P25RQR5 D52XW25RQR5	D52P50RQR5 D52XW50RQR5	D52P12RTR5 D52XW12RTR5	D52P25RTR5 D52XW25RTR5	D52P50RTR5 D52XW50RTR5	D52P50RQL5 D52XW50RQL5	D52P125RQL5 D52P125RQL5
Capacity × Readability	25 lb × 0.001 lb 12.5 kg × 0.5 g	50 lb × 0.002 lb 25 kg × 1 g	100 lb × 0.005 lb 50 kg × 2 g	25 lb × 0.001 lb 12.5 kg × 0.5 g	50 lb × 0.002 lb 25 kg × 1 g	100 lb × 0.005 lb 50 kg × 2 g		250 lb × 0.01 lb 125 kg × 5 g
Maximum Displayed Resolution	1:25,000							
Capacity × Certified Readability	25 lb × 0.005 lb 12.5 kg × 2 g	50 lb × 0.01 lb 25 kg × 5 g	100 lb × 0.02 lb 50 kg × 10 g	25 lb × 0.005 lb 12.5 kg × 2 g	50 lb × 0.01 lb 25 kg × 5 g	100 lb × 0.02 lb 50 kg × 10 g		250 lb × 0.05 lb 125 kg × 20 g
Min APW (g)	0.025	0.05	0.1	0.025	0.05	0.1		0.25
Internal Counting Resolution	1:500,000							
Linearity/Repeatability	± 2d							
Indicator	D52P models: TD52P ABS Indicator D52XW models: TD52XW Stainless Steel Indicator							
Mount	Stainless steel front-mount bracket with handle							
Base Construction	Stainless steel removable weighing platform, powder-coated steel base construction, aluminum loadcell silicon-sealed against moisture							
Safe Overload Capacity	150% of maximum capacity							
Stabilization Time	Within 1 second							
Operating Temperature Range	14°F to 104°F / -10°C to 40°C							
Scale Dimensions (A x B x C x D x E x F)	12 × 12 × 3.7 × 2.4 × 4.6 × 23.1 in 305 × 305 × 95 × 60 × 118 × 588 mm			14 × 12 × 3.9 × 2.4 × 4.6 × 25.1 in 355 × 305 × 99 × 60 × 118 × 638 mm			18 × 18 × 4.3 × 2.8 × 4.6 × 28.9 in 457 × 457 × 110 × 70 × 118 × 734 mm	
Shipping Dimensions (L x W x H)	18.9 × 17.5 × 14.3 in 480 × 445 × 363 mm						39.1 × 26.8 × 9.25 in 994 × 680 × 235 mm	
Approx. Net Weight	D52P: 19.8 lb / 9 kg / D52XW: 22 lb / 10 kg			D52P: 22 lb / 10 kg / D52XW: 24.3 lb /11 kg			D52P: 30.9 lb / 14 kg / D52XW: 33.1 lb / 15 kg	
Approx. Shipping Weight	D52P: 22 lb / 10 kg / D52XW: 24.3 lb /11 kg			D52P: 24.3 lb /11 kg / D52XW: 26.5 lb / 12 kg			D52P: 37.5 lb / 17 kg / D52XW: 39.7 lb / 18 kg	

Model	D52P50RTX5 D52XW50RTX5	D52P125RTX5 D52P125RTX5	D52P250RTX5 D52XW250RTX5	D52P50RQV5 D52XW50RQV5	D52P125RQV5 D52XW125RQV5	D52XW250RQV5 D52XW250RQV5	D52P125RTV5 D52P125RTV5
Capacity × Readability	100 lb × 0.005 lb 50 kg × 2 g	250 lb x 0.01 lb 125 kg x 5 g	500 lb x 0.02 lb 250 kg x 10 g	100 lb x 0.005 lb 50 kg x 2 g	250 lb x 0.01 lb 125 kg x 5 g	500 lb x 0.02 lb 250 kg x 10 g	250 lb x 0.01 lb 125 kg x 5 g
Maximum Displayed Resolution	1:25,000						
Capacity × Certified Readability	100 lb × 0.02 lb 50 kg × 10 g	250 lb x 0.05 lb 125 kg x 20 g	500 lb x 0.1 lb 250 kg x 50 g	100 lb × 0.02 lb 50 kg × 10 g	250 lb x 0.05 lb 125 kg x 20 g	500 lb x 0.1 lb 250 kg x 50 g	250 lb x 0.05 lb 125 kg x 20 g
Min APW (g)	0.1	0.25	0.5	0.1	0.25	0.5	1
Internal Counting Resolution	1:500,000						
Linearity/Repeatability	± 2d						
Indicator	D52P models: TD52P ABS Indicator D52XW models: TD52XW Stainless Steel Indicator						
Mount	Stainless steel front-mount bracket with handle						
Base Construction	Stainless steel removable weighing platform, powder-coated steel base construction, aluminum loadcell silicon-sealed against moisture						
Safe Overload Capacity	150% of maximum capacity						
Stabilization Time	Within 1 second						
Operating Temperature Range	14°F to 104°F / -10°C to 40°C						
Scale Dimensions (A x B x C x D x E x F)	24 × 18 × 5.1 × 3.5 × 4.6 × 34.9 in 610 × 457 × 130 × 90 × 118 × 887 mm			24 × 24 × 5.1 × 3.5 × 4.6 × 34.6 in 610 × 610 × 130 × 90 × 118 × 880 mm			31.5 × 23.6 × 5.2 × 3.5 × 4.6 × 42.1 in 800 × 600 × 132 × 90 × 118 × 1070 mm
Shipping Dimensions (L x W x H)	39.1 × 26.8 × 9.25 in 994 × 680 × 235 mm			45.9 × 30.7 × 9.25 in 1165 × 780 × 235 mm			
Approx. Net Weight	D52P: 52.9 lb / 24 kg / D52XW: 55.1 lb / 25 kg			D52P: 75 lb / 34 kg / D52XW: 77.2 lb / 35 kg			D52P: 92.6 lb / 42 kg / D52XW: 94.5 lb / 43 kg
Approx. Shipping Weight	D52P: 59.5 lb / 27 kg / D52XW: 61.7 lb / 28 kg			D52P: 81.6 lb / 37 kg / D52XW: 83.8 lb / 38 kg			D52P: 101.4 lb / 46 kg / D52XW: 103.6 lb / 47 kg

Document hosted by www.oldwillknottscales.com

Defender® 5000 Standard Low Profile Bench Scales

Application Modes

Weighing: Determine the weight of items in the selected unit of measure.

Parts Counting: Count samples of uniform weight. Advanced auto-optimization software recalculates the average piece of weight as the overall weight increases.

Checkweighing/Counting: Compare the weight/count of a sample against target limits. Connect with Discrete I/O and Light Tower Kit for external check lights.

Percent Weighing: Measure the weight of a sample displayed as a percentage of a pre-established reference weight.

Dynamic Weighing and Display Hold: Weigh an unstable load. Scale takes an average of weights over a period of time. The Display Hold feature manually or automatically holds the last stable weight on the display.

Other Standard Features and Equipment

User-configurable resolution up to 25,000d for general applications and up to 6,250e for legal-for-trade applications (depending on model and unit of measure), 150% overload capacity protection, checkweighing symbols with selectable operation and audible signal settings, menu lock switch, multiple selectable operating languages, selectable environmental and auto-print settings, stability indicator, overload/underload indicators, selectable adjust contrast settings, auto-dim display, auto-off, auto tare, non-slip adjustable rubber feet, a Wheel Kit option is also available for scales up to 300 kg.

Compliance

- **Metrology:** Measurement Canada (Indicator: NoA AM-6093, Platforms: NoA AM-6107); NTEP (Indicator: CC 18-065, Platforms: CC 18-077) Class III
- **Product Safety:** CAN/CSA C22.2 61010-1; UL61010-1; IEC/EN 61010-1
- **Electromagnetic Compatibility:** FCC Part 15 Class B; Canada ICES-003 Class B; IEC/EN 61326-1 Class B, basic environments
- **Compliance Marks:** CE; CSA

Accessories

Battery Kit, Li-ion, TD52 30424405
USB Host for Dongle, TD52 30424406
Light Tower, 3 Colors, 243mm, IP65
(Requires 30097591) 30424021
In-use Cover Kit, TD52P 30424022
In-use Cover Kit, TD52XW 30424023
In-use Cover set (10), TD52P 30469948
In-use Cover set (10), TD52XW 30469949
Printer Holder Kit, D52 30424025
Wall Mount Kit, SST, TD52XW 30424026
Wall Mount Kit, CS, TD52P 30424027
LC Extension Cable, 9 meters, D52[1] 30424409
M16 Gland with Ferrite, to TD52 30379716
Micro SD Card, 8G 30303533
Analog Output Kit, TD52[3] 30424403
Second RS232/RS485/USB Kit, TD52[3] 30424404
I/O with Relay (2 In/4 Out)[3] 30097591
WiFi/BT Dongle, OHAUS[2] **(Requires 30424406)** 30412537
Ethernet Kit, D52[2] 30429666
Wheel Kit, Defender Series[1] 30372146
Impact Printer SF40A 30064203
Thermal Printer STP-103 80251992

[1] Cannot be used for legal-for-trade applications [2] Only one of them can be used at the same time [3] Only one of them can be used at the same time

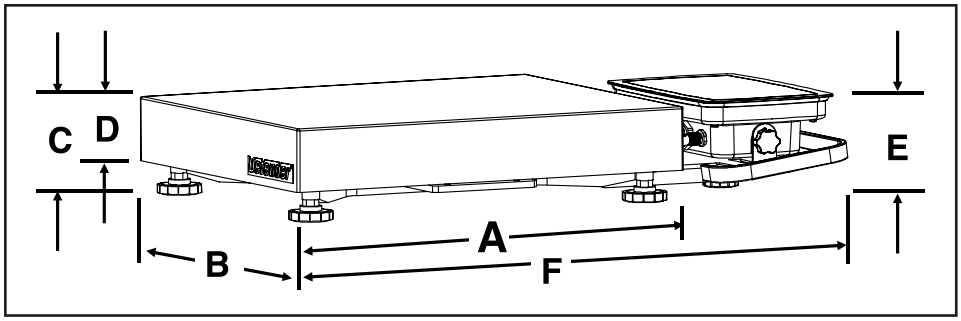

OHAUS CORPORATION
7 Campus Drive
Suite 310
Parsippany, NJ 07054 USA

Tel: 800.672.7722
973.377.9000
Fax: 973.944.7177

www.ohaus.com

The management system governing the manufacture of this product is ISO 9001:2015 certified.

80775503 20181113 © Copyright OHAUS Corporation